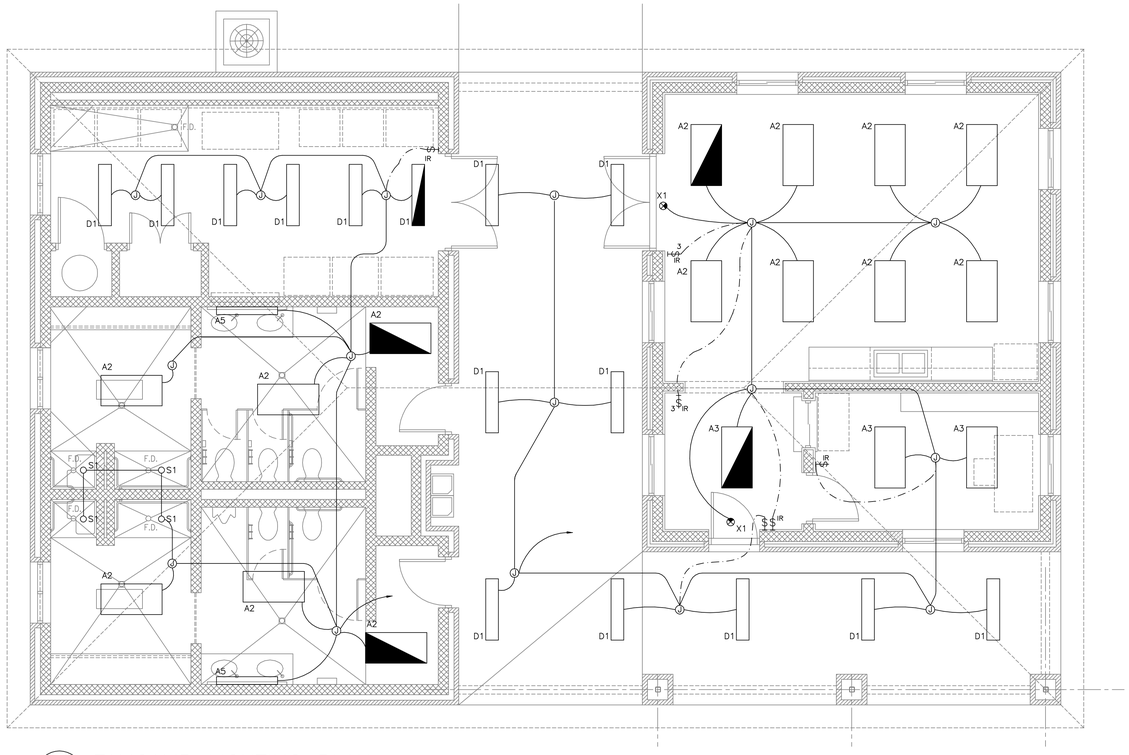

1 / E201 FAMCAMP LIGHTING PLAN
SCALE: 1/4" =1'-0"

LIGHTING FIXTURE SCHEDULE

MARK	MANUFACTURER & CATALOG NUMBER	# LAMPS	MOUNTING	FIXTURE VA	LAMP DATA	VOLTAGE	NOTES
A2	LITHONIA # 2SP-X-2-32-A12-X-GEB10	2	*	90	F32/T8	*	STATIC TROUFER MOUNTING AND VOLTAGE AS REQUIRED.
A3	LITHONIA # 2SP-X-3-32-A12-X-GEB10	3	*	120	F32/T8	*	STATIC TROUFER MOUNTING AND VOLTAGE AS REQUIRED.
A4	LITHONIA # 2SP-X-4-32-A12-X-GEB10	4	*	160	F32/T8	*	STATIC TROUFER MOUNTING AND VOLTAGE AS REQUIRED.
A5	LIGHTOLIER CWBX240WB*OC	2	WALL	90	F32/T8	*	WALL MOUNTED UP/DOWN LIGHT
D1	LITHONIA # DM-2-48HO-X-GEB10	2	SURFACE	110	F48 / HO	*	INCLOSED AND GASKETED INDUSTRIAL VOLTAGE AS REQUIRED.
DW1	LITHONIA # DMW-2-48HO-X-GEB10	2	SURFACE	110	F48 / HO	*	INCLOSED AND GASKETED INDUSTRIAL VOLTAGE AS REQUIRED. LISTED FOR WET LOCATION.
G1	LITHONIA # C-2-32-X-GEB10-WGCUN	2	SURFACE	90	F32/T8	*	GENERAL PURPOSE STRIP VOLTAGE AR REQUIRED
S1	LITHONIA # LGF-1/26DTT-9FW-DOL-XXX	1	REL	30	F26DTT	*	COMPACT FLOURESCENT SHOWER LIGHT
W1	LITHONIA # TWM-250S-TB	1	WALL	300	HPS 250W	*	HIGH PRESURE SODIUM WALL-PAK WITH MULTI-TAP BALLAST.
X1	LITHONIA # LRP-B-X-GC-X-120/277-ELN-X	N/A	*	2	LED	120/277	EDGE-LIT EXIT WITH FACES, DIRECTIONAL INDICATOR AND MOUNTING AS REQUIRED.

KEYED NOTES: (THIS SHEET ONLY)

1. CONTRACTOR SHALL PROVIDE, INSTALL, AND CONNECT COMPLETE CLASS A FIRE ALARM SYSTEM TO MEET ALL LOCAL AND BASE CODES.

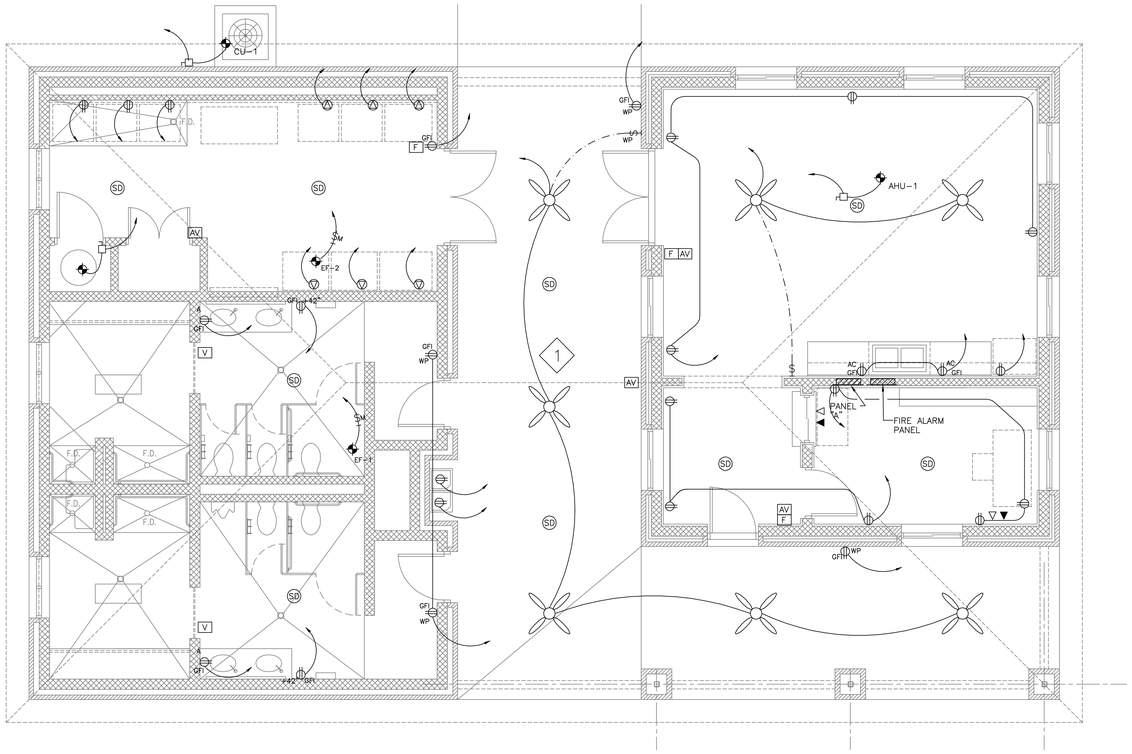

2 / E201 FAMCAM POWER PLAN
SCALE: 1/4" =1'-0"

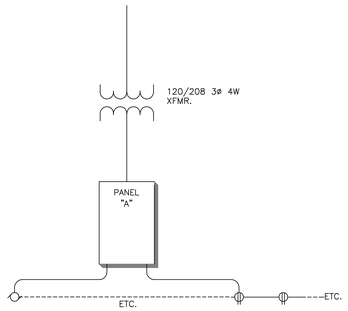

3 / E201 ONE-LINE DIAGRAM
N.T.S.

SYMBOL		DESCRIPTION	DATE	APPROVAL

REVISIONS

Drawn by: G. CRAWL

COORDINATION:

Engr:

Design and Construction:

APPROVAL:

Director of Facilities date

Director of Operations date

HEADQUARTERS AIR FORCE SERVICES AGENCY

Title:
UNITED STATES AIR FORCE
NON-APPROPRIATED FUNDS PROJECT
35% AFNAF PROTOTYPES DESIGN
CONTRACT NO. NAFBA195CD0012
FAMCAMP SERVICE FACILITY - LIGHTING AND POWER PLAN

SCALE: 1/4" = 1'-0" DATE: APRIL 17, 2000

DRAWING NUMBER:

SHEET E201 OF

T:\99044\PLBG\P201