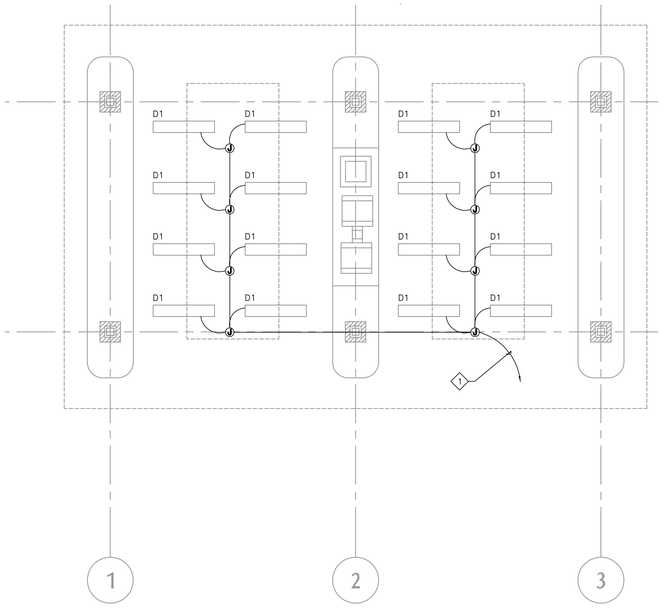

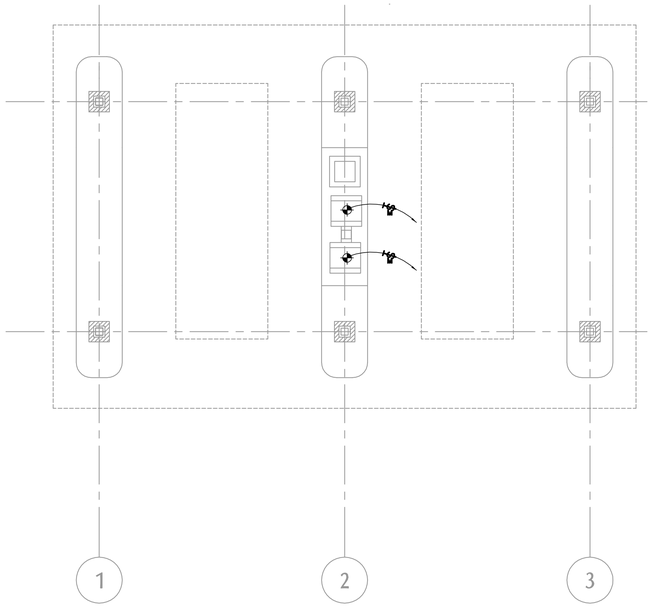

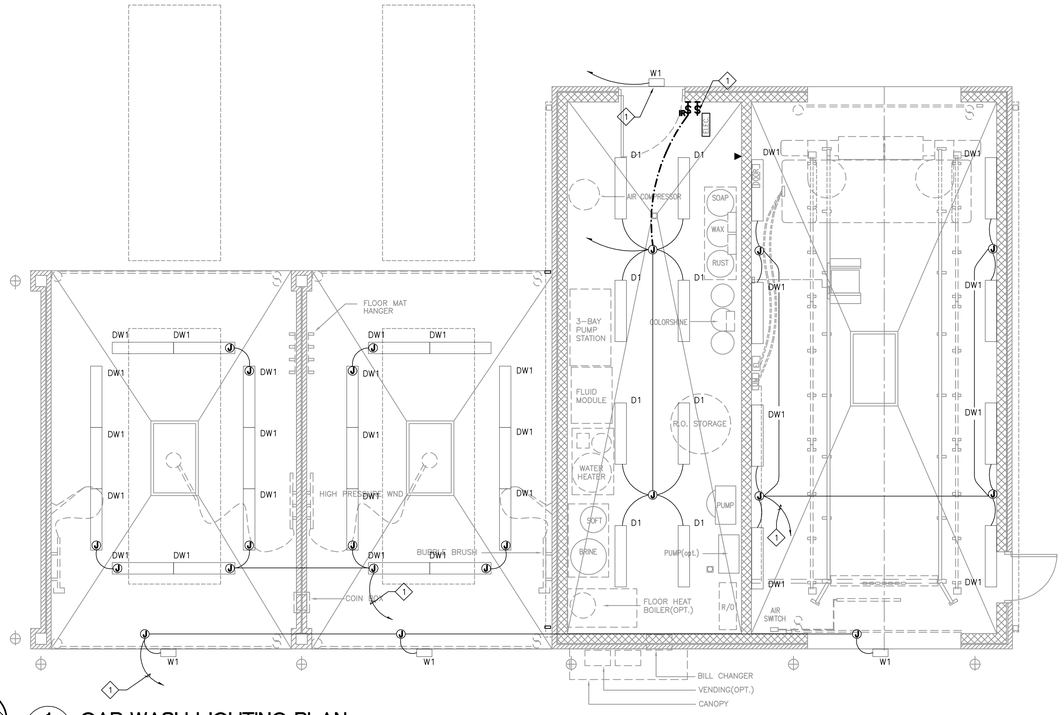

PLAN NORTH

1 CAR WASH LIGHTING PLAN

E301 E301

SCALE: 1/4" =1'-0"

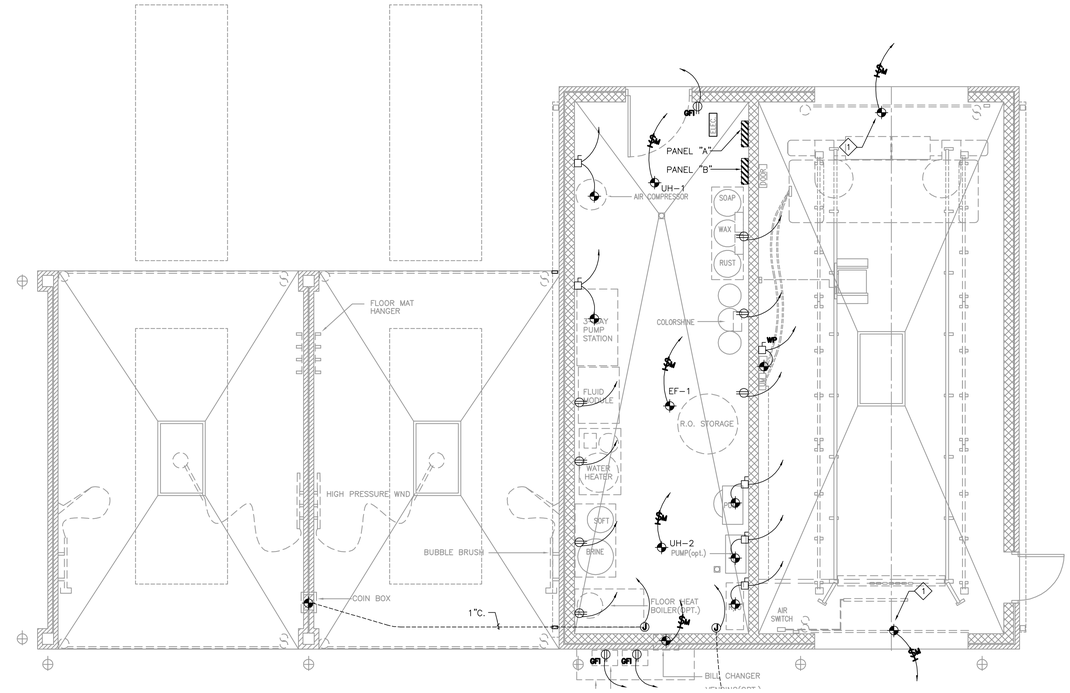

PLAN NORTH

2 CAR WASH POWER PLAN

E301 E301

SCALE: 1/4" =1'-0"

LIGHTING FIXTURE SCHEDULE

MARK	MANUFACTURER & CATALOG NUMBER	# LAMPS	MOUNTING	FIXTURE VA	LAMP DATA	VOLTAGE	NOTES
A2	LITHONIA # 2SP-X-2-32-A12-X-GEB10	2	*	90	F32/T8	*	STATIC TROUFER MOUNTING AND VOLTAGE AS REQUIRED.
A3	LITHONIA # 2SP-X-3-32-A12-X-GEB10	3	*	120	F32/T8	*	STATIC TROUFER MOUNTING AND VOLTAGE AS REQUIRED.
A4	LITHONIA # 2SP-X-4-32-A12-X-GEB10	4	*	160	F32/T8	*	STATIC TROUFER MOUNTING AND VOLTAGE AS REQUIRED.
D1	LITHONIA # DM-2-48HO-X-GEB10	2	SURFACE	110	F48 / HO	*	INCLOSED AND GASKETED INDUSTRIAL VOLTAGE AS REQUIRED.
DW1	LITHONIA # DMW-2-48HO-X-GEB10	2	SURFACE	110	F48 / HO	*	INCLOSED AND GASKETED INDUSTRIAL VOLTAGE AS REQUIRED. LISTED FOR WET LOCATION.
G1	LITHONIA # C-2-32-X-GEB10-WGCUN	2	SURFACE	90	F32/T8	*	GENERAL PURPOSE STRIP VOLTAGE AR REQUIRED
W1	LITHONIA # TWM-250S-TB	1	WALL	300	HPS 250W	*	HIGH PRESURE SODIUM WALL-PAK WITH MULTI-TAP BALLAST.
X1	LITHONIA # LRP-B-X-GC-X-120/277-ELN-X	N/A	*	2	LED	120/277	EDGE-LIT EXIT WITH FACES, DIRECTIONAL INDICATOR AND MOUNTING AS REQUIRED.

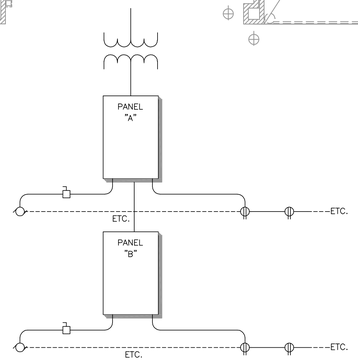

3 ONE-LINE DIAGRAM

E301 E301

N.T.S

KEYED NOTES: (THIS SHEET ONLY)

1. CONTRACTOR SHALL CONTROL THESE FIXTURERS VIA PHOTOCELL WITH MANUAL OVERRIDE SWITCH (HAND, OFF AUTO) LOCATED IN THE ELECTRICAL ROOM.
2. CONTRACTOR SHALL INSTALL AND CONNECT POWER DOOR OPERATORS (OPTIONAL).

SYMBOL	DESCRIPTION	DATE	APPROVAL

REVISIONS

Drawn by: G. CRAWL

COORDINATION

Engr:

Design and Construction:

APPROVAL

Director of Facilities date

Director of Operations date

HEADQUARTERS AIR FORCE SERVICES AGENCY

Title:

UNITED STATES AIR FORCE
NON-APPROPRIATED FUNDS PROJECT
35% AFNAF PROTOTYPES DESIGN
CONTRACT NO. NAFBA195CD002
POV CARWASH - LIGHTING AND POWER PLAN

SCALE: 1/4" = 1'-0" DATE: APRIL 17, 2000

DRAWING NUMBER:

SHEET E301 OF